Embedded Systems Design: A Unified Hardware/Software Introduction

Chapter 2: Custom single-purpose processors

Outline

- Introduction
- Combinational logic
- Sequential logic
- Custom single-purpose processor design
- RT-level custom single-purpose processor design

Introduction

- Processor
  - Digital circuit that performs a computation task
  - Controller and datapath
  - General-purpose: variety of computation tasks
  - Single-purpose: one particular computation task
  - Custom single-purpose: non-standard task
- A custom single-purpose processor may be
  - Fast, small, low power
  - But, high NRE, longer time-to-market, less flexible

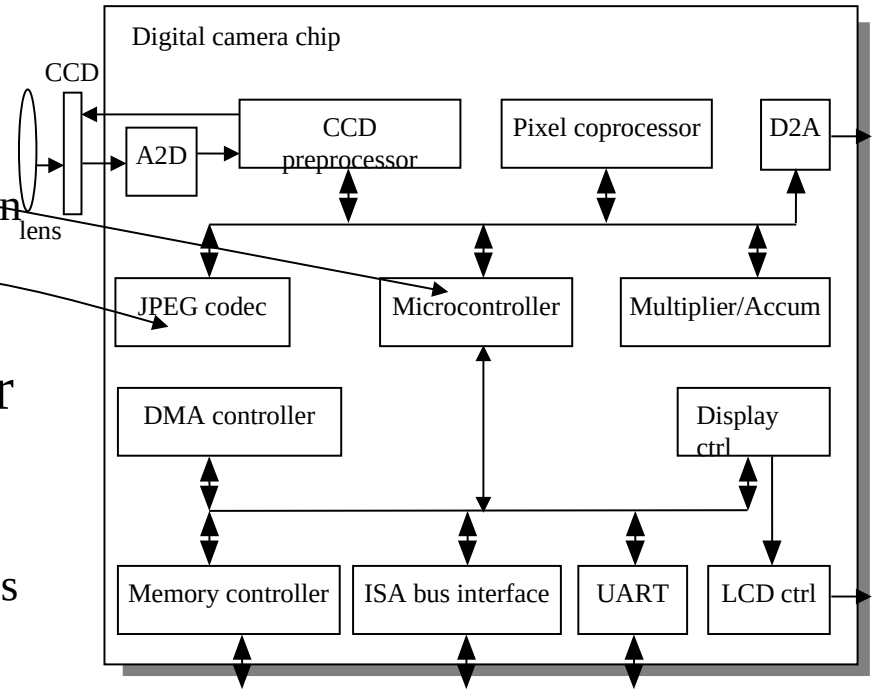

CMOS transistor on silicon

- Transistor
  - The basic electrical component in digital systems
  - Acts as an on/off switch
  - Voltage at “gate” controls whether current flows from source to drain
  - Don’t confuse this “gate” with a logic gate

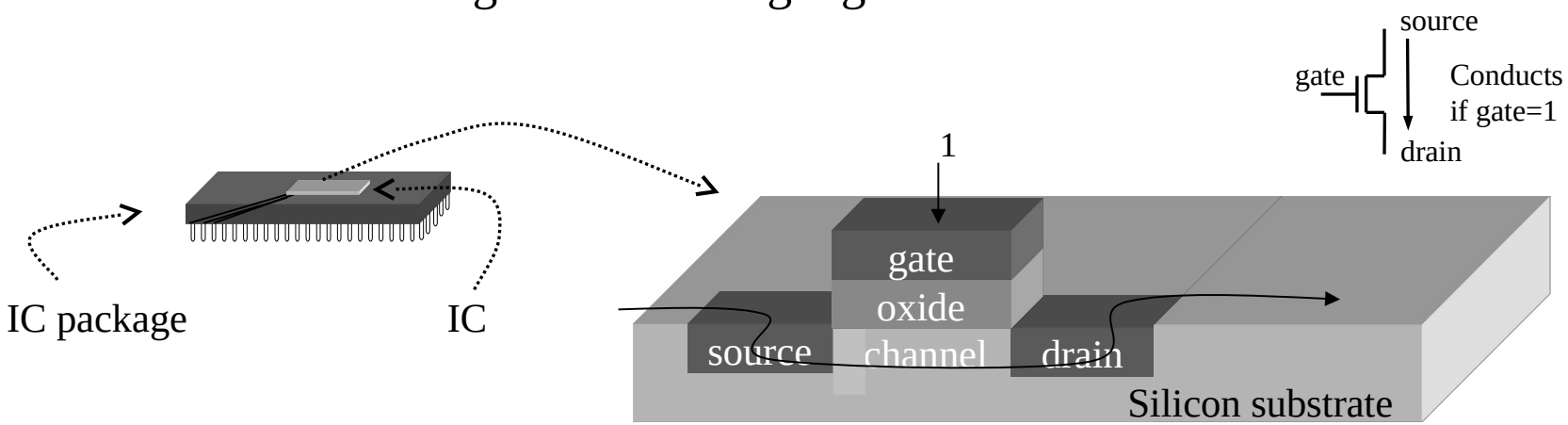

CMOS transistor implementations

- Complementary Metal Oxide Semiconductor
- We refer to logic levels
  - Typically 0 is 0V, 1 is 5V
- Two basic CMOS types
  - nMOS conducts if gate=1
  - pMOS conducts if gate=0
  - Hence “complementary”
- Basic gates
  - Inverter, NAND, NOR

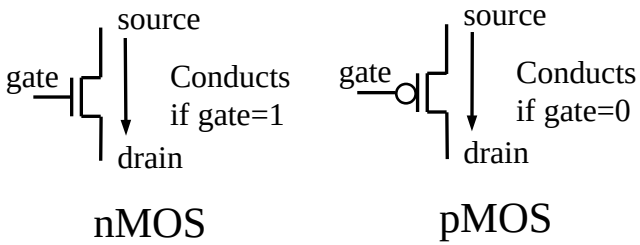

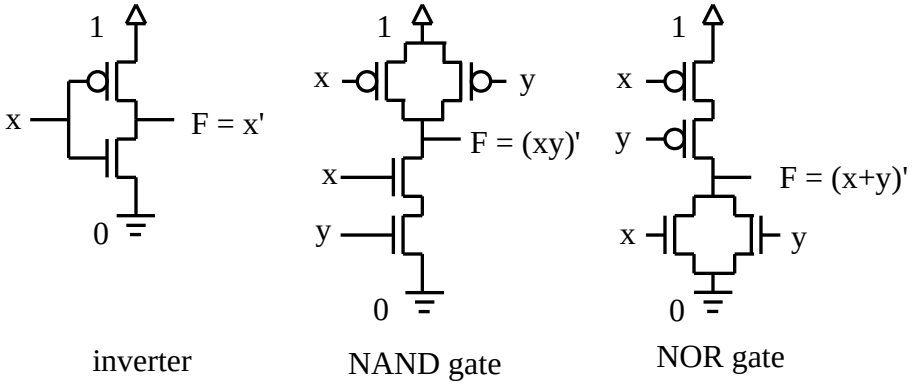

Basic logic gates

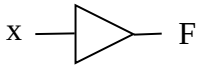

x	F
0	0
1	1

F = x
Driver

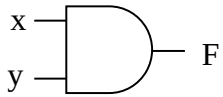

x	y	F
0	0	0
0	1	0
1	0	0
1	1	1

F = x y
AND

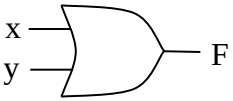

x	y	F
0	0	0
0	1	1
1	0	1
1	1	1

F = x + y
OR

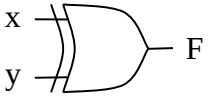

x	y	F
0	0	0
0	1	1
1	0	1
1	1	0

F = x ⊕ y
XOR

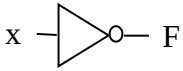

x	F
0	1
1	0

F = x’
Inverter

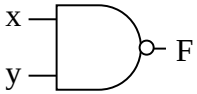

x	y	F
0	0	1
0	1	1
1	0	1
1	1	0

F = (x y)’
NAND

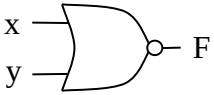

x	y	F
0	0	1
0	1	0
1	0	0
1	1	0

F = (x+y)’
NOR

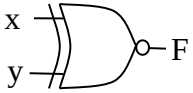

x	y	F
0	0	1
0	1	0
1	0	0
1	1	1

F = x ⊙ y
XNOR

Combinational logic design

A) Problem description

y is 1 if a is to 1, or b and c are 1. z is 1 if b or c is to 1, but not both, or if all are 1.

B) Truth table

Inputs			Outputs	
a	b	c	y	z
0	0	0	0	0
0	0	1	0	1
0	1	0	0	1
0	1	1	1	0
1	0	0	1	0
1	0	1	1	1
1	1	0	1	1
1	1	1	1	1

C) Output equations

y = a'bc + ab'c' + ab'c + abc' + abc

z = a'b'c + a'bc' + ab'c + abc' + abc

D) Minimized output equations

y: a \ bc	00	01	11	10
0	0	0	1	0
1	1	1	1	1

y = a + bc

z: a \ bc	00	01	11	10
0	0	1	0	1
1	0	1	1	1

z = ab + b’c + bc’

E) Logic Gates

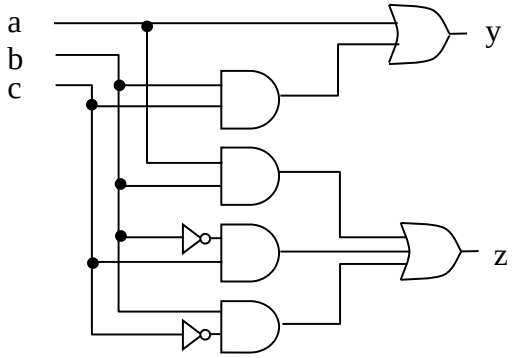

Combinational components-RT level components

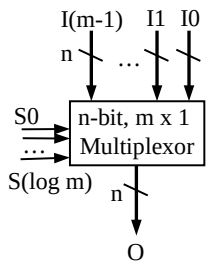	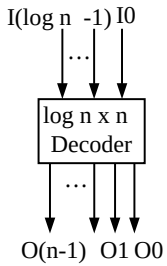	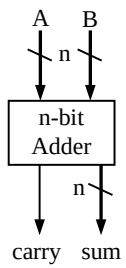	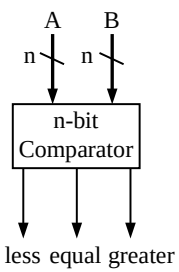	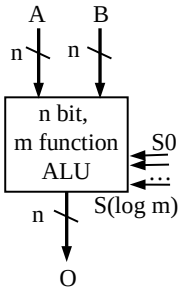
O = I0 if S=0..00 I1 if S=0..01 … I(m-1) if S=1..11	O0 =1 if I=0..00 O1 =1 if I=0..01 … O(n-1) =1 if I=1..11	sum = A+B (first n bits) carry = (n+1)'th bit of A+B	less = 1 if A<B equal =1 if A=B greater=1 if A>B	O = A *op* B *op* determined by S.
	With enable input e → all O's are 0 if e=0	With carry-in input Ci→ sum = A + B + Ci		May have status outputs carry, zero, etc.

Sequential components

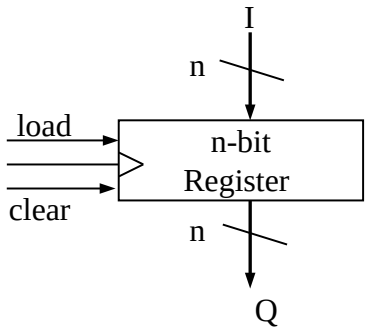	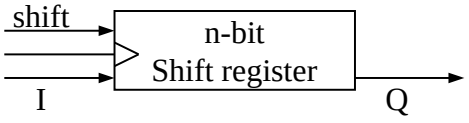	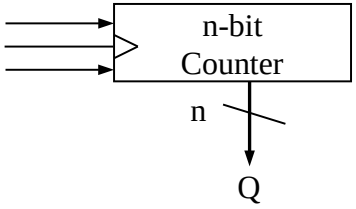
Q = 0 if clear=1, I if load=1 and clock=1, Q(previous) otherwise.	Q = lsb - Content shifted - I stored in msb	Q = 0 if clear=1, Q(prev)+1 if count=1 and clock=1.

Sequential logic design

A) Problem Description

You want to construct a clock divider. Slow down your pre-existing clock so that you output a 1 for every four clock cycles

B) State Diagram

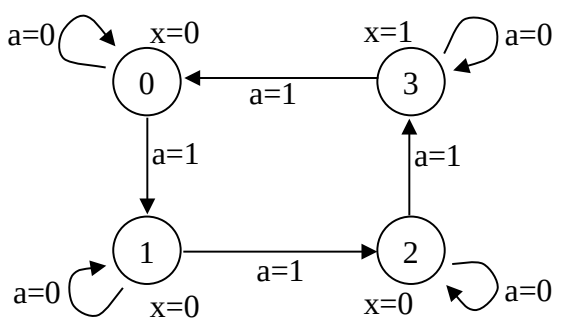

C) Implementation Model

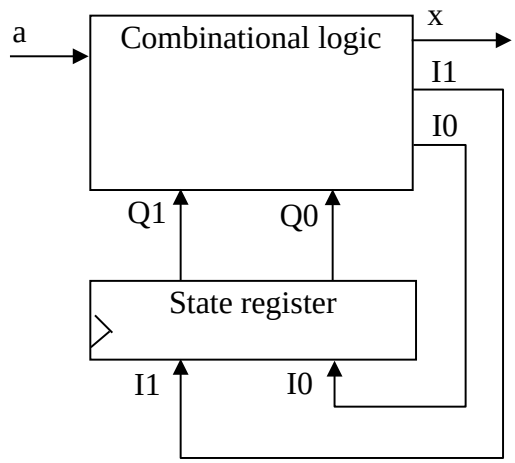

D) State Table (Moore-type)

Inputs			Outputs		
Q1	Q0	a	I1	I0	x
0	0	0	0	0	0
0	0	1	0	1	
0	1	0	0	1	0
0	1	1	1	0	
1	0	0	1	0	0
1	0	1	1	1	
1	1	0	1	1	1
1	1	1	0	0	

- Given this implementation model
  - Sequential logic design quickly reduces to combinational logic design

Sequential logic design (cont.)

E) Minimized Output Equations

I1

a \ Q1Q0	00	01	11	10
0	0	0	1	1
1	0	1	0	1

I1 = Q1'Q0a + Q1a' + Q1Q0'

I0

a \ Q1Q0	00	01	11	10
0	0	1	1	0
1	1	0	0	1

I0 = Q0a' + Q0'a

x

a \ Q1Q0	00	01	11	10
0	0	0	1	0
1	0	0	1	0

x = Q1Q0

F) Combinational Logic

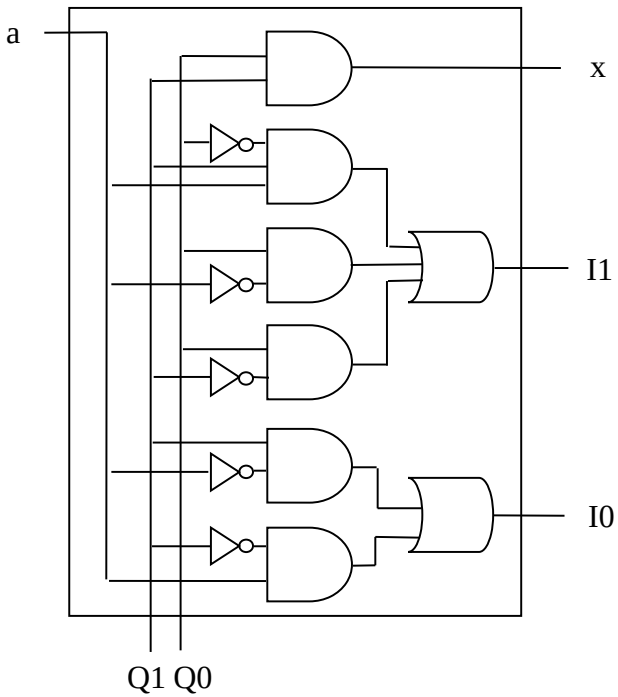

Custom single-purpose processor basic model

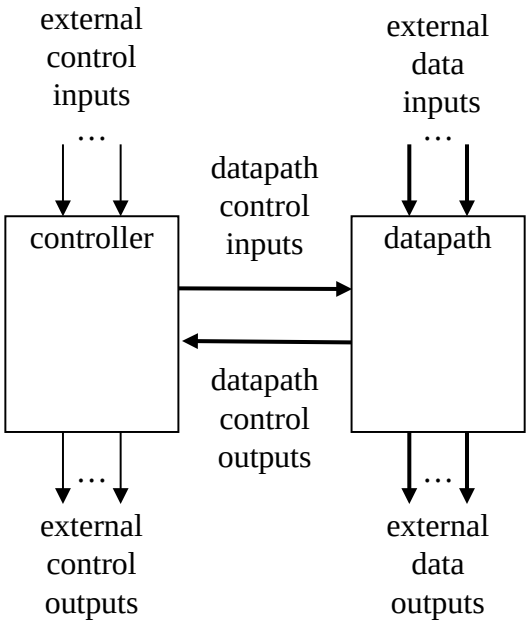

controller and datapath

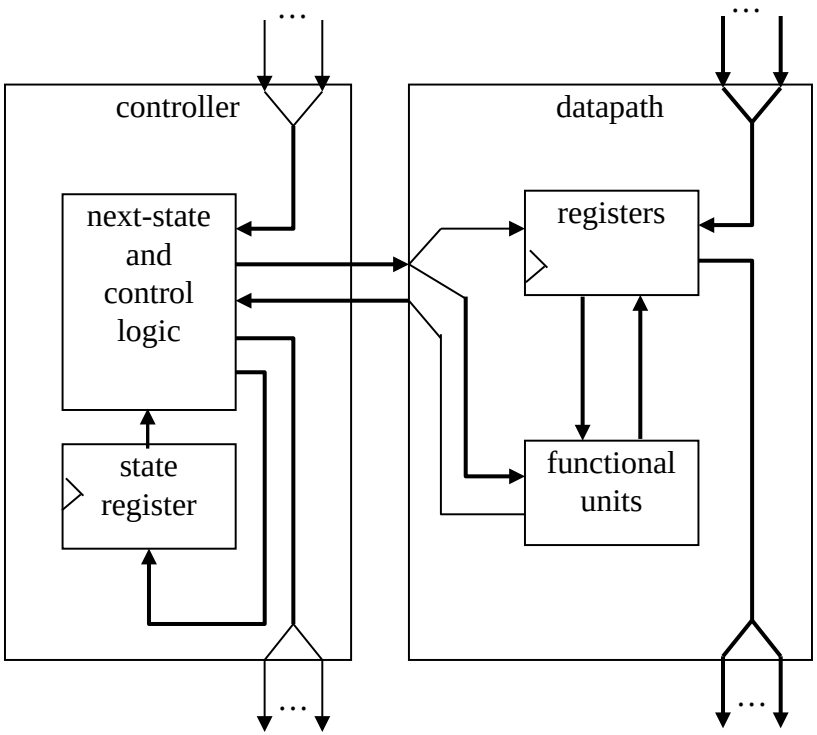

a view inside the controller and datapath

Example: greatest common divisor

- First create algorithm
- Convert algorithm to "complex" state machine
  - Known as FSMD: finite-state machine with datapath
  - Can use templates to perform such conversion

(a) black-box view

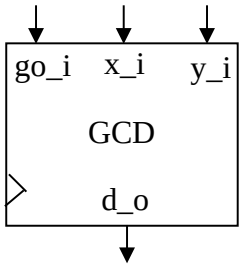

(b) desired functionality

```
0: int  x, y;
1: while (1) {
2:   while (!go_i);
3:   x = x_i;
4:   y = y_i;
5:   while  (x != y)  {
6:       if  (x < y)
7:           y = y - x;
         else
8:           x = x - y;
     }
9:   d_o = x;
   }
```

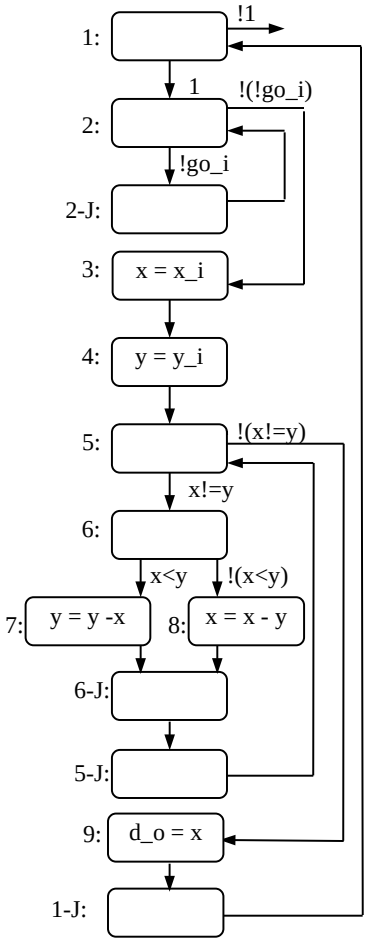

(c) state diagram

State diagram templates

Assignment statement

a = b
next statement

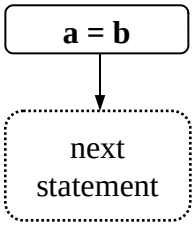

Loop statement

while (cond) {
loop-body-
statements
}
next statement

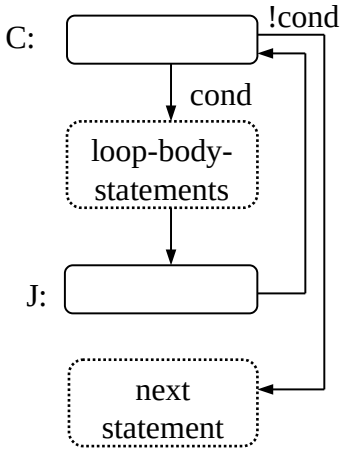

Branch statement

if (c1)
c1 stmts
else if c2
c2 stmts
else
other stmts
next statement

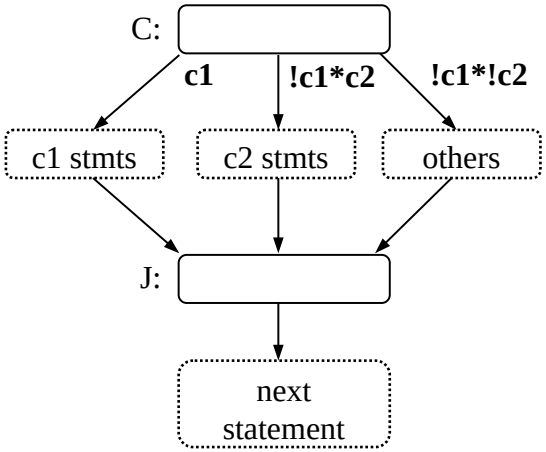

Creating the datapath

- Create a register for any declared variable
- Create a functional unit for each arithmetic operation
- Connect the ports, registers and functional units
  - Based on reads and writes
  - Use multiplexors for multiple sources
- Create unique identifier
  - for each datapath component control input and output

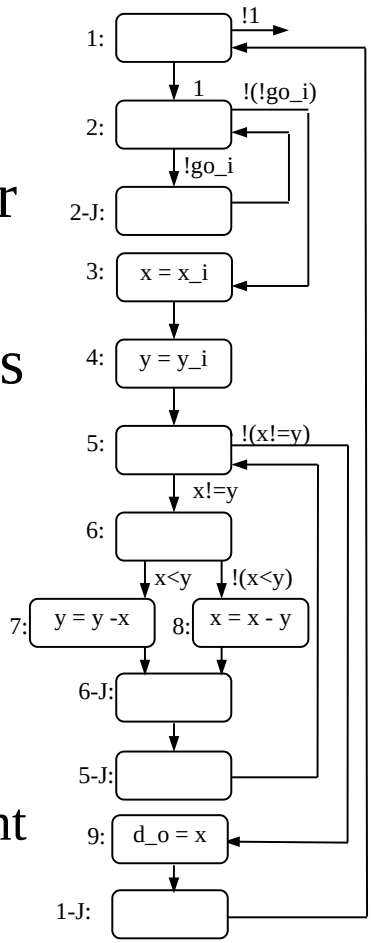

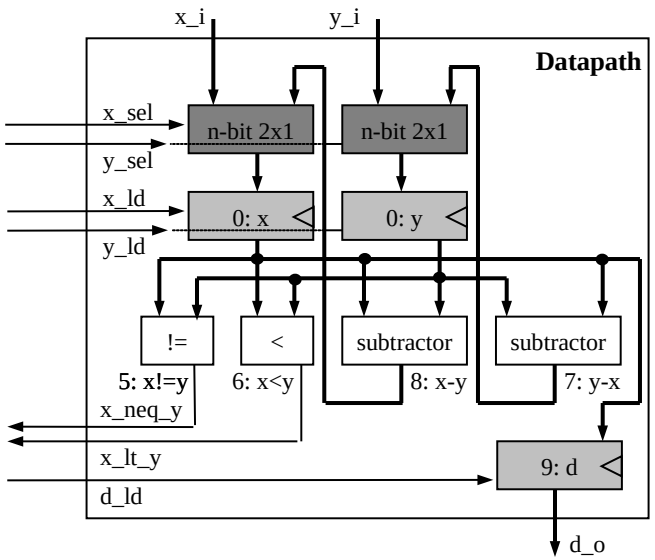

Creating the controller's FSM

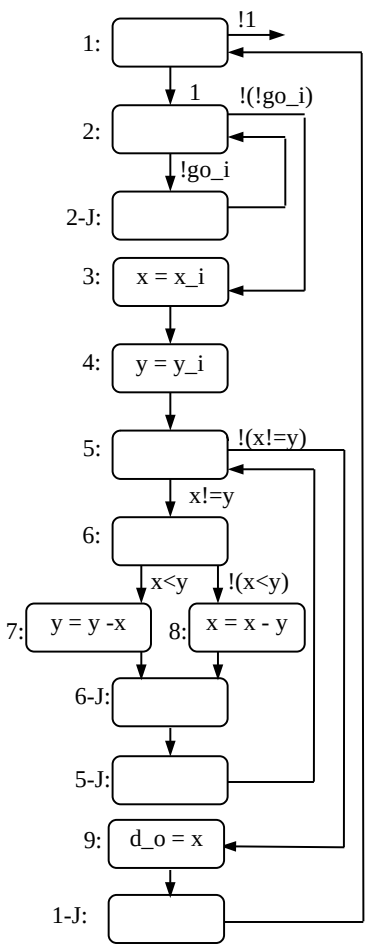

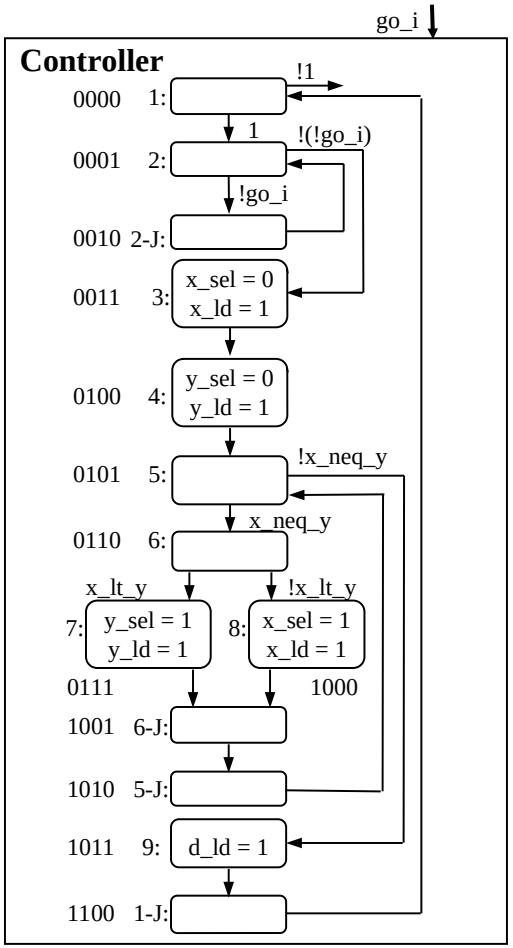

- Same structure as FSMD
- Replace complex actions/conditions with datapath configurations

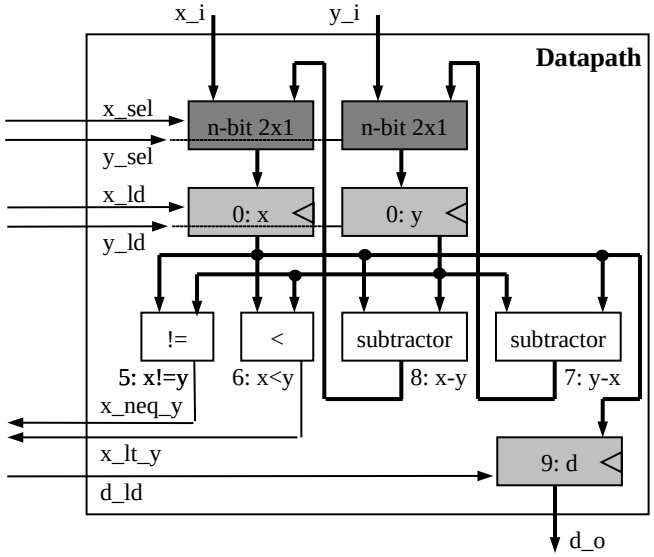

Splitting into a controller and datapath

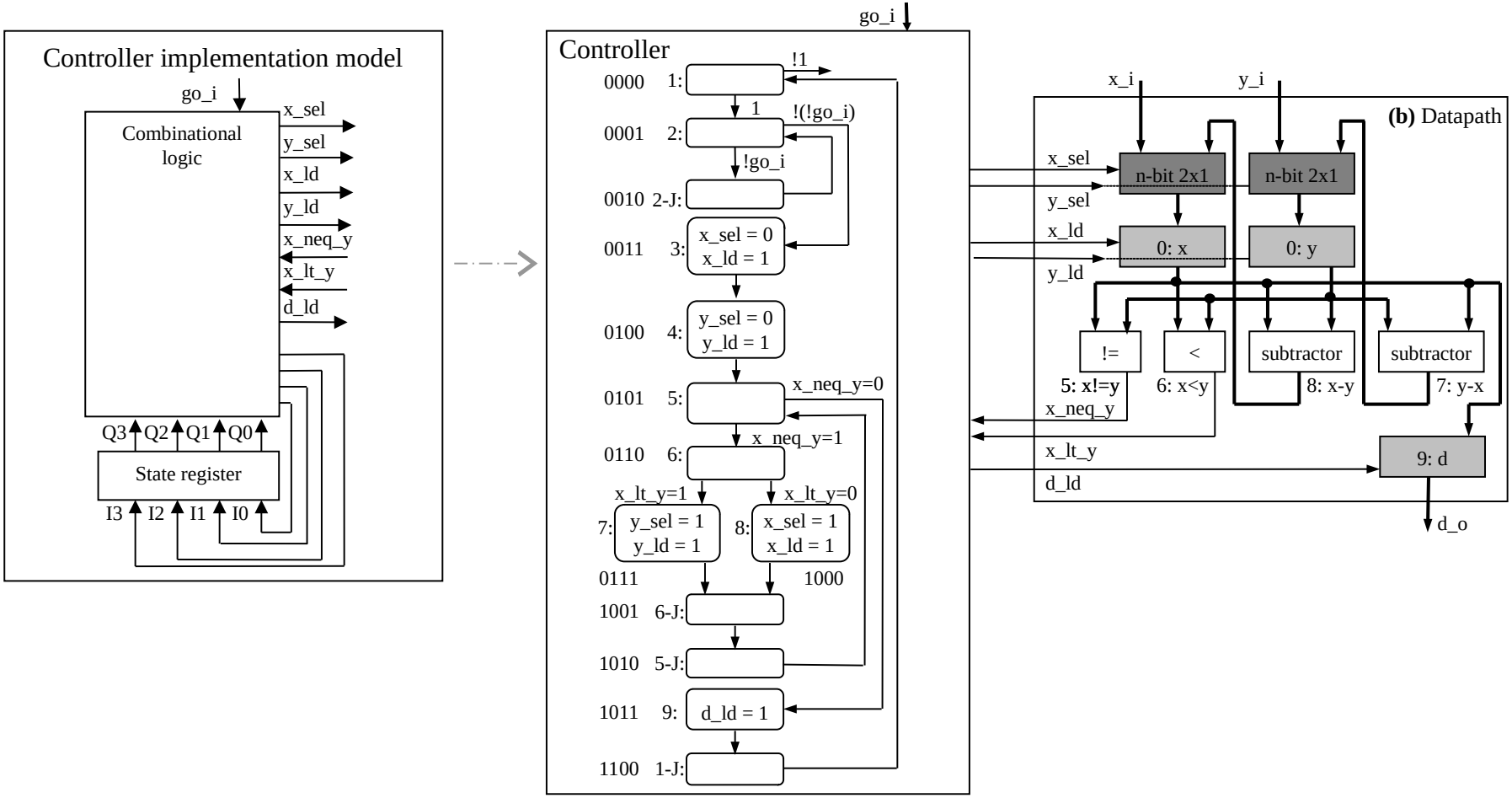

Controller state table for the GCD example

Inputs							Outputs								
Q3	Q2	Q1	Q0	x_neq_y	x_lt_y	go_i	I3	I2	I1	I0	x_sel	y_sel	x_ld	y_ld	d_ld
0	0	0	0	*	*	*	0	0	0	1	X	X	0	0	0
0	0	0	1	*	*	0	0	0	1	0	X	X	0	0	0
0	0	0	1	*	*	1	0	0	1	1	X	X	0	0	0
0	0	1	0	*	*	*	0	0	0	1	X	X	0	0	0
0	0	1	1	*	*	*	0	1	0	0	0	X	1	0	0
0	1	0	0	*	*	*	0	1	0	1	X	0	0	1	0
0	1	0	1	0	*	*	1	0	1	1	X	X	0	0	0
0	1	0	1	1	*	*	0	1	1	0	X	X	0	0	0
0	1	1	0	*	0	*	1	0	0	0	X	X	0	0	0
0	1	1	0	*	1	*	0	1	1	1	X	X	0	0	0
0	1	1	1	*	*	*	1	0	0	1	X	1	0	1	0
1	0	0	0	*	*	*	1	0	0	1	1	X	1	0	0
1	0	0	1	*	*	*	1	0	1	0	X	X	0	0	0
1	0	1	0	*	*	*	0	1	0	1	X	X	0	0	0
1	0	1	1	*	*	*	1	1	0	0	X	X	0	0	1
1	1	0	0	*	*	*	0	0	0	0	X	X	0	0	0
1	1	0	1	*	*	*	0	0	0	0	X	X	0	0	0
1	1	1	0	*	*	*	0	0	0	0	X	X	0	0	0
1	1	1	1	*	*	*	0	0	0	0	X	X	0	0	0

Completing the GCD custom single-purpose processor design

- We finished the datapath
- We have a state table for the next state and control logic
  - All that's left is combinational logic design
- This is *not* an optimized design, but we see the basic steps

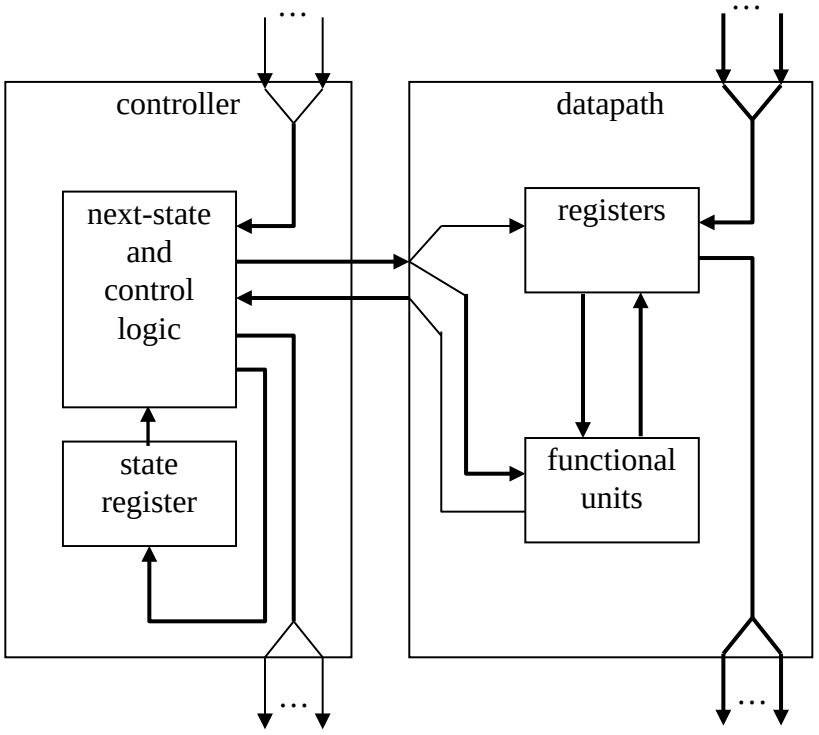

a view inside the controller and datapath

RT-level custom single-purpose processor design

- We often start with a state machine
  - Rather than algorithm
  - Cycle timing often too central to functionality
- Example
  - Bus bridge that converts 4-bit bus to 8-bit bus
  - Start with FSMD
  - Known as register-transfer (RT) level
  - Exercise: complete the design

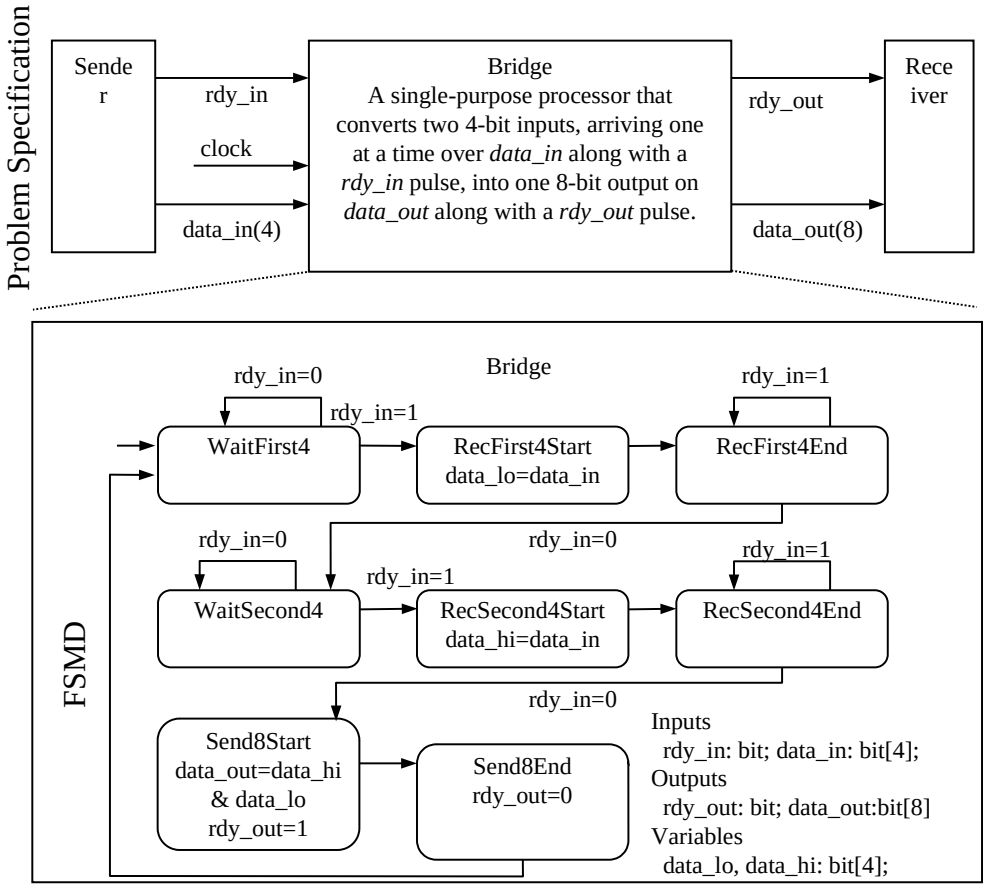

RT-level custom single-purpose processor design (cont')

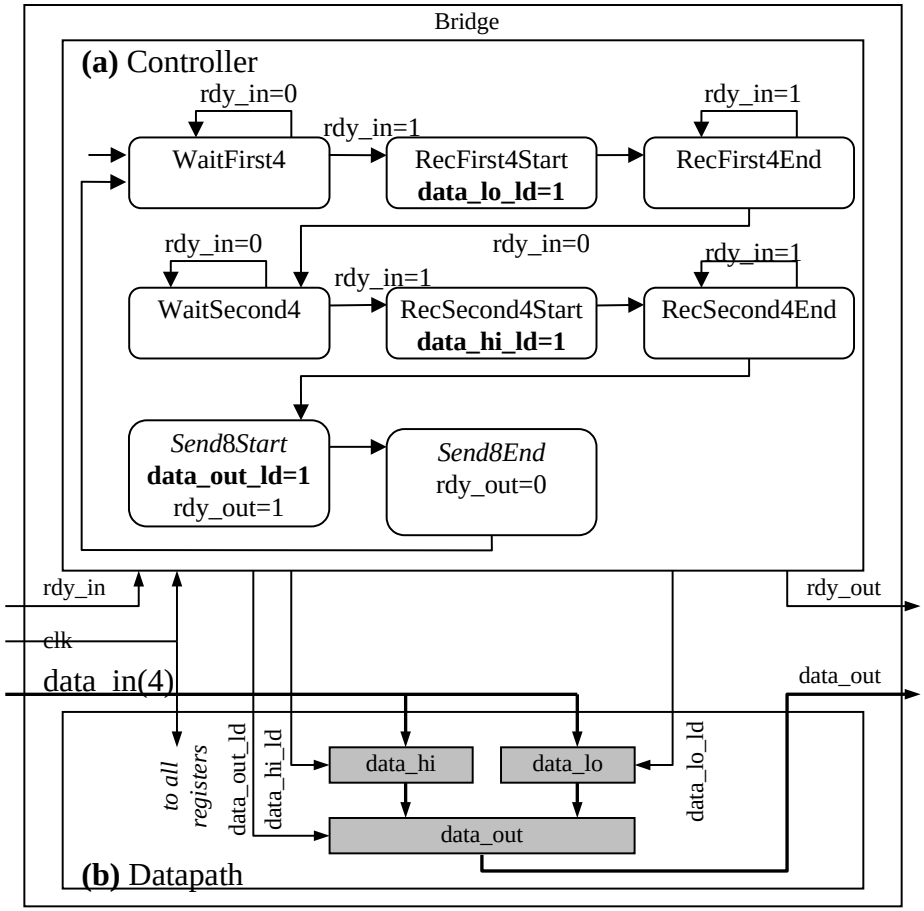

Optimizing single-purpose processors

- Optimization is the task of making design metric values the best possible
- Optimization opportunities
  - original program
  - FSMD
  - datapath
  - FSM

Optimizing the original program

- Analyze program attributes and look for areas of possible improvement
  - number of computations
  - size of variable
  - time and space complexity
  - operations used
    - multiplication and division very expensive

Optimizing the original program (cont')

original program

```
int  x, y;
while (1) {
  while (!go_i);
  x = x_i;
  y = y_i;
  while  (x != y)  {
      if  (x < y)
          y = y - x;
      else
          x = x - y;
  }
  d_o = x;
}
```

replace the subtraction operation(s) with modulo operation in order to speed up program

optimized program

```
int  x, y, r;
while (1) {
  while (!go_i);
  // x must be the larger number
  if (x_i >= y_i)  {
      x=x_i;
      y=y_i;
  }
  else {
      x=y_i;
      y=x_i;
  }
  while  (y != 0)  {
      r = x % y;
      x = y;
      y = r;
  }
  d_o = x;
}
```

GCD(42, 8) - 9 iterations to complete the loop

x and y values evaluated as follows : (42, 8), (43, 8), (26,8), (18,8), (10, 8), (2,8), (2,6), (2,4), (2,2).

GCD(42,8) - 3 iterations to complete the loop

x and y values evaluated as follows: (42, 8), (8,2), (2,0)

Optimizing the FSMD

- Areas of possible improvements
  - merge states
    - states with constants on transitions can be eliminated, transition taken is already known
    - states with independent operations can be merged
  - separate states
    - states which require complex operations (a*b*c*d) can be broken into smaller states to reduce hardware size
  - scheduling

Optimizing the FSMD (cont.)

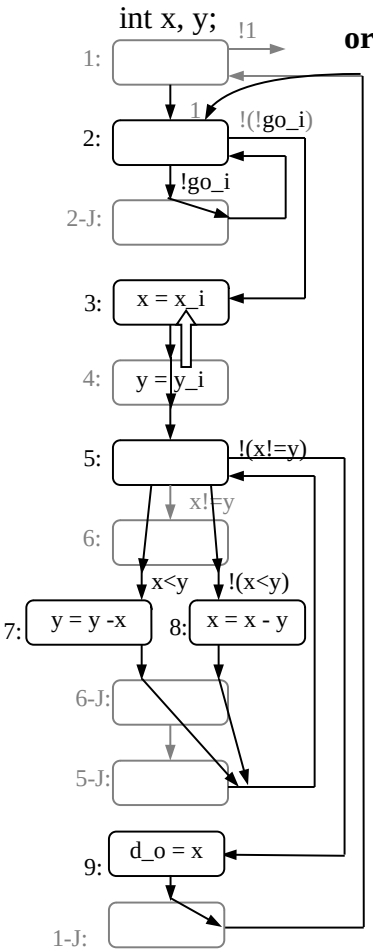

original FSMD

eliminate state 1 – transitions have constant values

merge state 2 and state 2J – no loop operation in between them

merge state 3 and state 4 – assignment operations are independent of one another

merge state 5 and state 6 – transitions from state 6 can be done in state 5

eliminate state 5J and 6J – transitions from each state can be done from state 7 and state 8, respectively

eliminate state 1-J – transition from state 1-J can be done directly from state 9

optimized FSMD

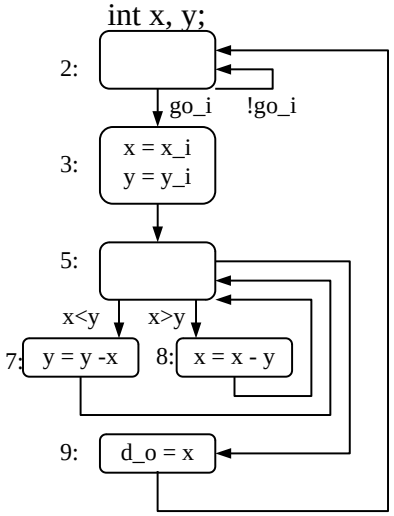

Optimizing the datapath

- Sharing of functional units
  - one-to-one mapping, as done previously, is not necessary
  - if same operation occurs in different states, they can share a single functional unit
- Multi-functional units
  - ALUs support a variety of operations, it can be shared among operations occurring in different states

Optimizing the FSM

- State encoding
  - task of assigning a unique bit pattern to each state in an FSM
  - size of state register and combinational logic vary
  - can be treated as an ordering problem
- State minimization
  - task of merging equivalent states into a single state
    - state equivalent if for all possible input combinations the two states generate the same outputs and transitions to the next same state

Summary

- Custom single-purpose processors
  - Straightforward design techniques
  - Can be built to execute algorithms
  - Typically start with FSMD
  - CAD tools can be of great assistance